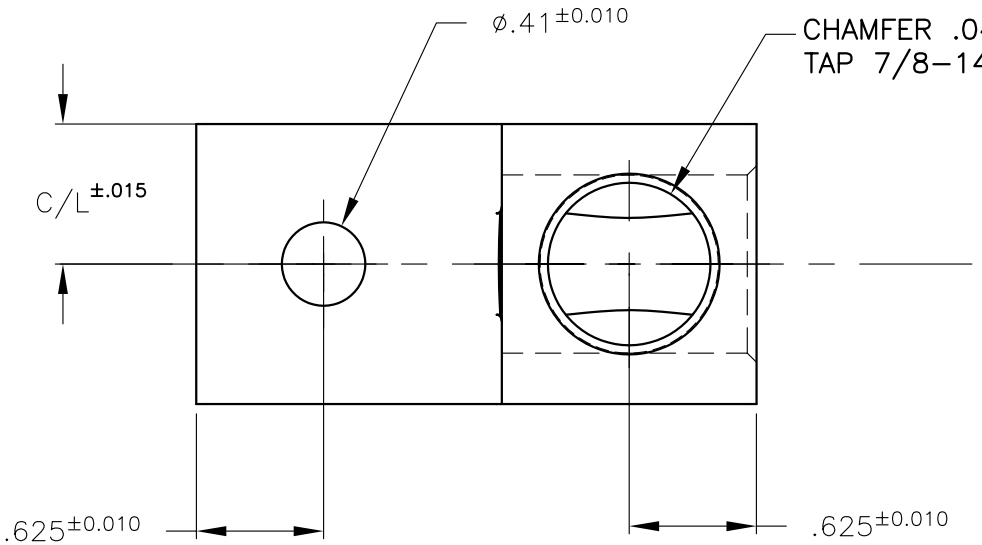

PARTS MARKED
500 kcmil-4
CU9AL
UL logo
CSA logo
IHI logo
S500

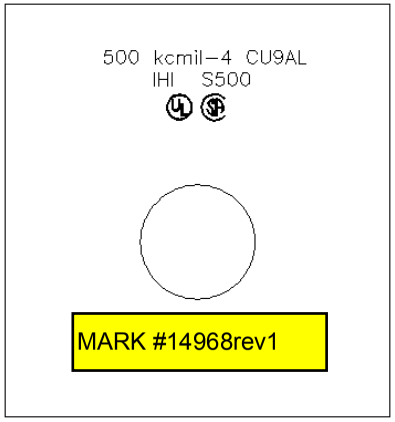

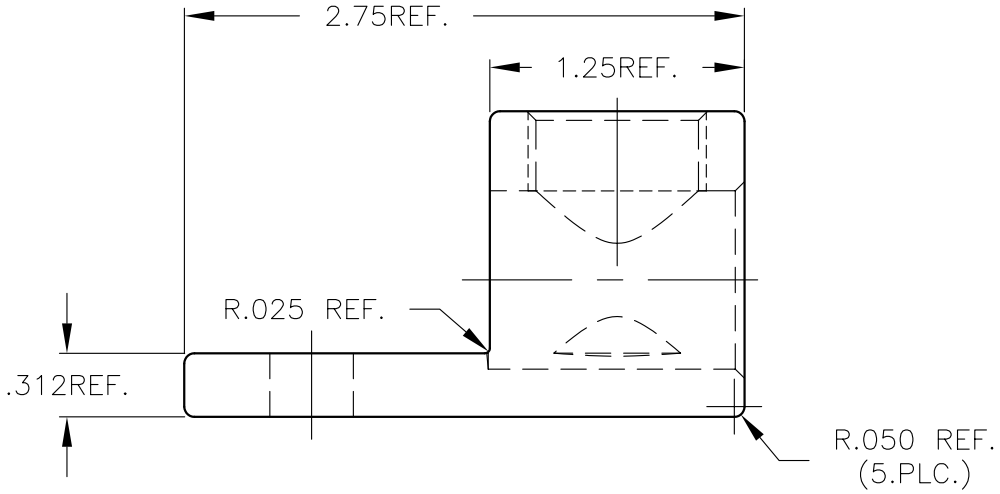

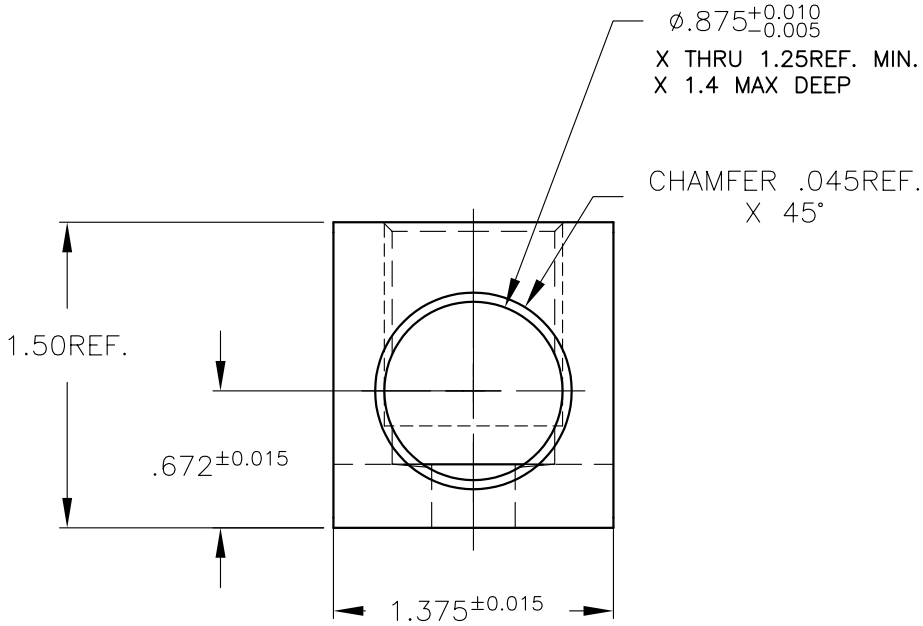

NOTE: ASSEMBLE WITH (1) 14141 SCREW

THIS DRAWING AND DESIGN ARE THE PROPERTY OF INTERNATIONAL HYDRAULICS INC., CLEVELAND, OHIO, AND MAY NOT BE DUPLICATED, USED FOR BASIS OF DESIGN OR MANUFACTURE WITHOUT THE WRITTEN PERMISSION OF INTERNATIONAL HYDRAULICS INC., CLEVELAND, OHIO.

UNLESS OTHERWISE SPECIFIED:
1. DIMENSIONS ARE IN INCHES.
2. REMOVE ALL BURRS AND SHARP EDGES.
3. TOLERANCE ON DIM'S
2 PLACES (.00) ± .010
3 PLACES (.000) ± .005
FRACTIONS ± 1/32
ANGLES (00°) ±0.5°
ANGLES (0.00°) ±0.05°

INTERNATIONAL HYDRAULICS, INC.

TITLE: S500-41-63

MATERIAL:	SIZE:	DRAWN BY:	CHECKED BY:		REV:
EXTRUSION P/N X600	A	TDS		DRAWING: S500-41-63	0
FINISH:	DATE: 5/29/08		SCALE: NTS	THIS IS A CAD DRAWING, DO NOT MANUALLY REVISE	